GENERAL TOLERANCE						
DIM. RANGE	0.5 ~ 3	> 3 ~ 6	> 6 ~ 30	> 30 ~ 120	> 120 ~ 400	SURFACE FINISH
TOLERANCE	±0.1	±0.1	±0.2	±0.3	±0.5	1.6

CUSTOMER DRAWING

REVISIONS		
REV	DESCRIPTION	DATE

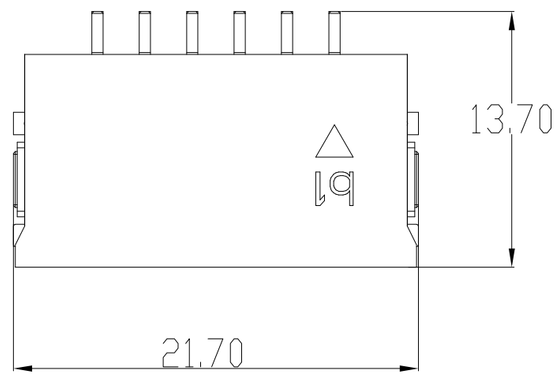

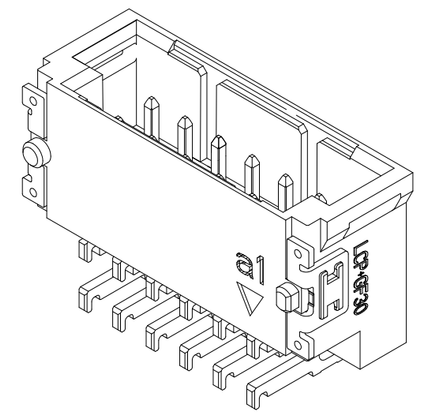

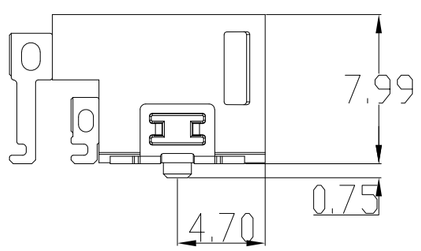

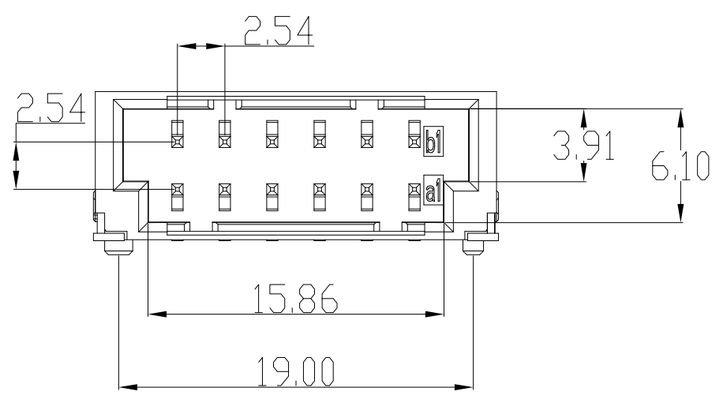

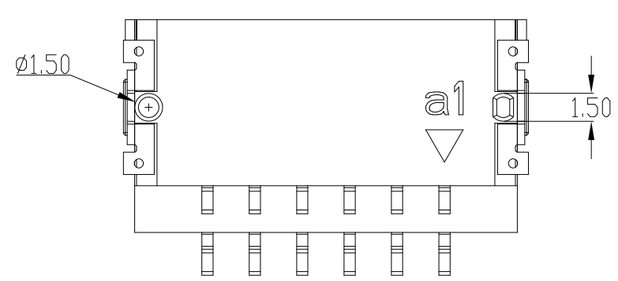

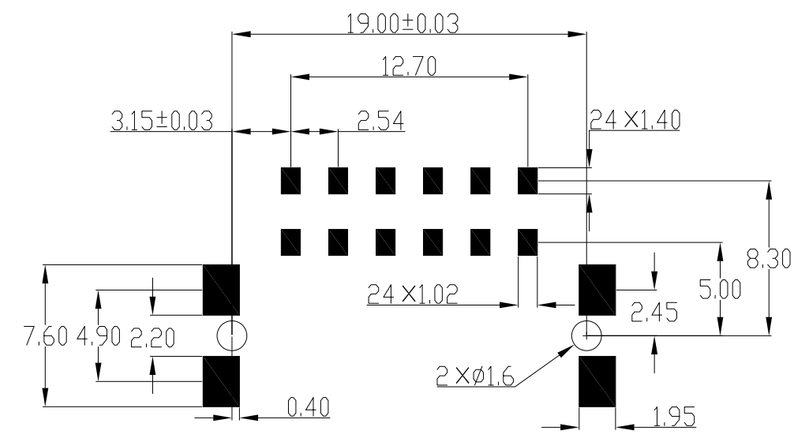

RECOMMENDED PCB-LAYOUT

NOTES:
1. THE PRODUCTS ARE RoHS COMPLIANCE.
2. MATERIAL SPEC:
   HOUSING: LCP THREMOPLASTIC,UL94 V-0,BLACK COLOR.
   CONTACT: COPPER ALLOY,MATING AREA GOLD PLATING,OTHER AREA TIN PLATING.
3. COPLANARITY AREA OF TERMINATION ≤0.1mm.

UNLESS OTHERWISE SPECIFIED

LINEAR DIMENSIONS ARE IN:
MILLIMETERS
TOLERANCES:
ANGLES= ±2°
DEFAULT LINEAR TOLERANCES SEE TABLE

DIM.& TOL. PER ASME Y14.5M-1994;
DRM PER MIL-DTL-31000;

LEGENDS:
△ =FLAG NOTE CALL OUT
REFERENCE ONLY

SPECIFICATIONS

MATERIAL SPEC.
SEE NOTES 2

PROCESS SPEC.
--

POS	QTY	PART NUMBER	DESCRIPTION	NOTE

APPROVALS		DATE
PREPARED BY	JUSTIN LI	2020/5/6
ENGINEER IN CHARGE	TYLER QIU	
DESIGN MANAGER	TYLER QIU	
DESIGN ACTIVITY GROUP		

THIRD ANGLE PROJECTION

上海良速电子有限公司

Powermax U
12pin dual row RA male SMT connector

SIZE	DOCUMENT NO.	REV.
C	PM-MA12201	A

SCALE: REF. SHEET 1 OF 1