GENERAL TOLERANCE						
DIM. RANGE	0.5 ~ 3	> 3 ~ 6	> 6 ~ 30	> 30 ~ 120	> 120 ~ 400	SURFACE FINISH
TOLERANCE	±0.1	±0.1	±0.2	±0.3	±0.5	1.6

CUSTOMER DRAWING

REVISIONS		
REV	DESCRIPTION	DATE
A	First releas	Jun 29 2020
B	Drawing Templet update	May 28 2021

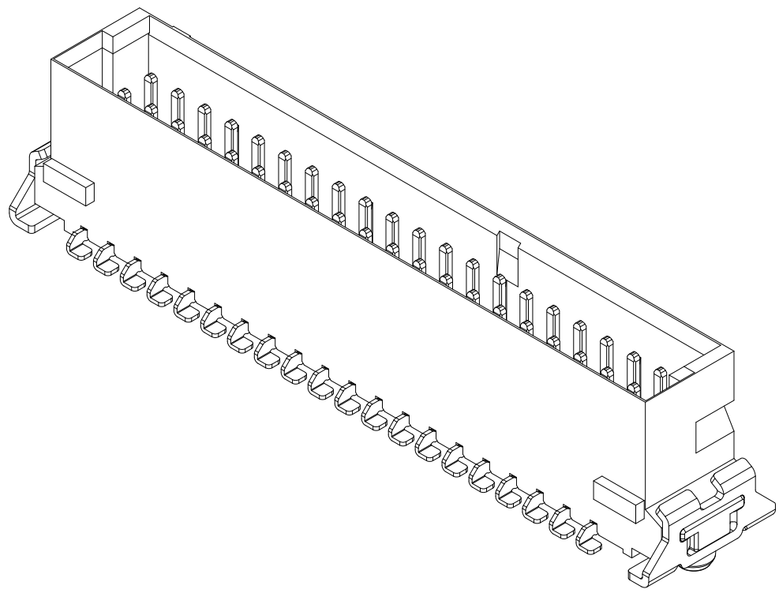

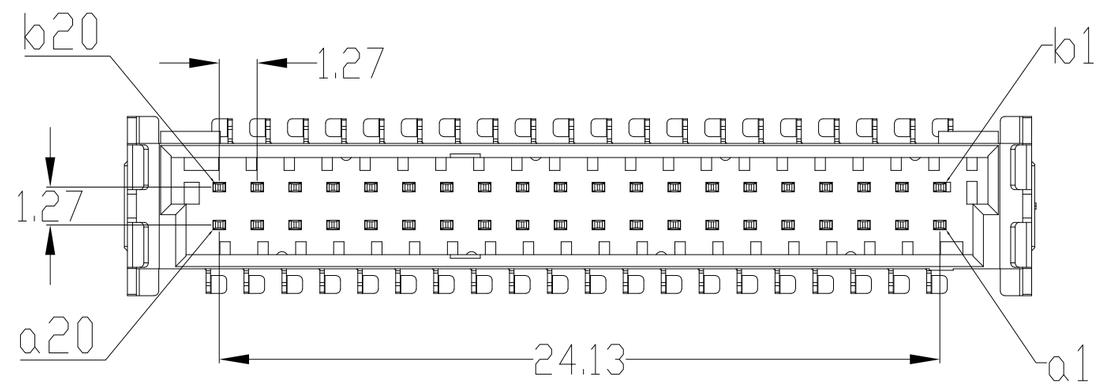

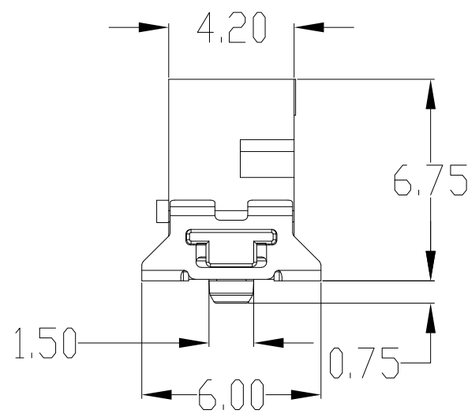

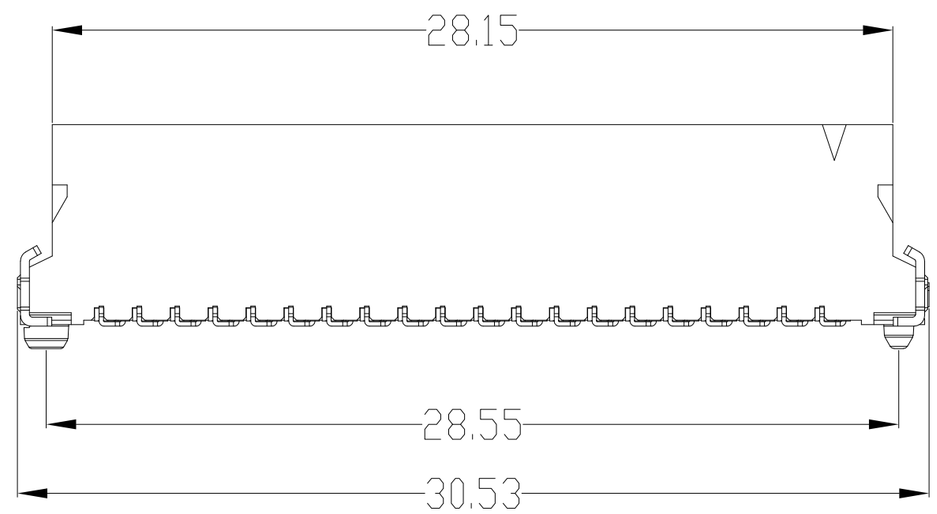

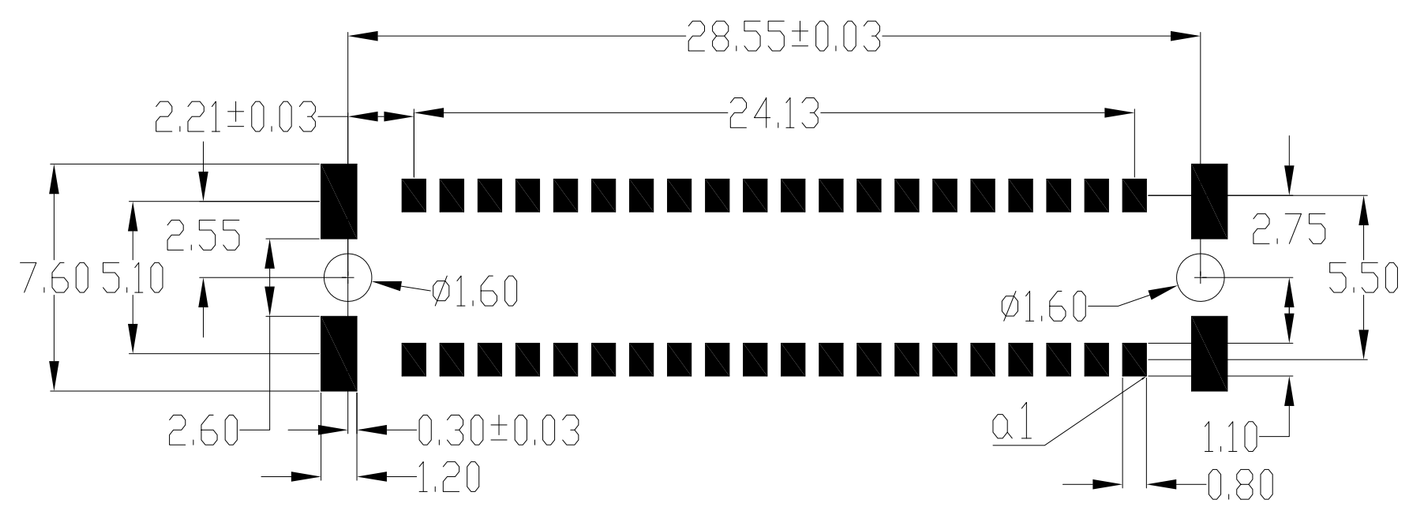

recommended PCB layout

NOTES:

1. THE PRODUCTS ARE RoHS COMPLIANCE.

2. MATERIAL SPEC:
   HOUSING:LCP THREMOPLASTIC,UL94 V-0,BLACK COLOR.
   CONTACT:COPPER ALLOY,MATING AREA GOLD PLATING,OTHER AREA TIN PLATING.

UNLESS OTHERWISE SPECIFIED	SPECIFICATIONS	POS	QTY	PART NUMBER	DESCRIPTION	NOTE
LINEAR DIMENSIONS ARE IN: MILLIMETERS TOLERANCES: ANGLES= ±2° DEFAULT LINEAR TOLERANCES SEE TABLE DIM.& TOL. PER ASME Y14.5M-1994; DRM PER MIL-DTL-31000; LEGENDS: △=FLAG NOTE CALL OUT REFERENCE ONLY	MATERIAL SPEC. SEE NOTES 2 PROCESS SPEC. --					

APPROVALS		DATE
PREPARED BY	JUSTIN LI	2021/5/28
ENGINEER IN CHARGE	TYLER QIU	
DESIGN MANAGER	TYLER QIU	
DESIGN ACTIVITY GROUP		

THIRD ANGLE PROJECTION

上海良速电子有限公司

Singnalite

1.27mm dual Row 40pin V Male SMT Connector

SIZE	DOCUMENT NO.	REV.
C	SL-MV40101	B

SCALE: 1:1 REF. SHEET 1 OF 1